Shaft coupling design No. 001 - casted materials -

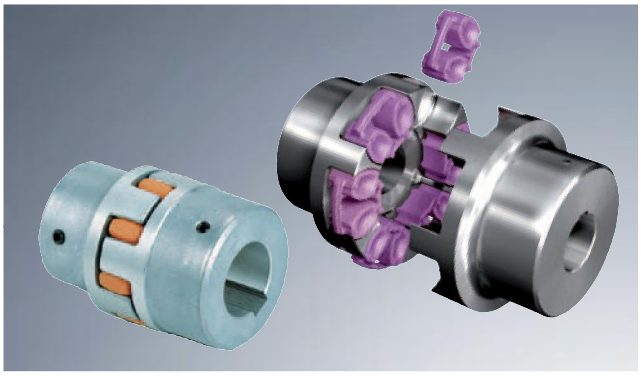

- Torsionally flexible, maintenance-free
- Damping vibrations
- Axial plug-in, fail-safe
- Machined allover - good dynamic properties
- Compact design/low flywheel effect
- Finish bore acc. to ISO fit H7, feather keyway acc. to DIN 6885 sheet 1 - JS9.
- Stock programme/basic programme see pages 28 and 29
- Ex Approved according to EC standard 94/9/EC (except for aluminium AL-D)
- Mounting instructions at www.ktr.com

Components

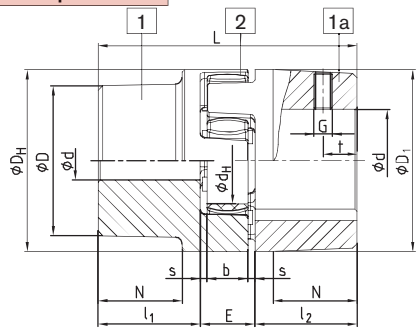

AL-D (thread opposite to the keyway)

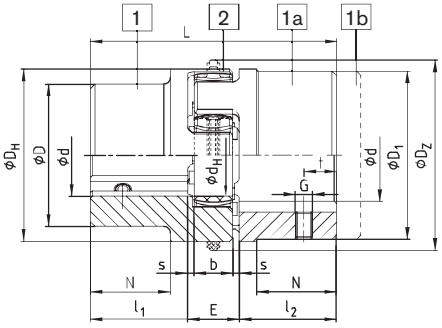

GJL / GJS (thread on the keyway)

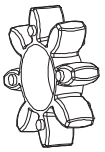

Spider
Hardness 92Sh-A, 95/98Sh-A, 64Sh-D
Standard from size 14- 180

Elements DZ
Hardness 92Sh-A and 95Sh-A size 100 - 180

ROTEX® Aluminium diecast (Al-D)																		
Size	Compo-nent	Spider (part 2) [1] Rated torque [Nm]			Dimensions [mm]													
					Finish bore d (min-max)	General										Thread for setscrew		
		92 Sh-A	98 Sh-A	64 Sh-D		L	l_1; l_2	E	b	s	D_H	D_Z	d_H	D; D_1	N	G	t	T_A [Nm]
14 [2]	1a	7,5	12,5	—	6-16	35	11	13	10	1,5	30	—	10	30	—	M4	5	1,5
19	1	10	17	—	6-19	66	25	16	12	2	41	—	18	32	20	M5	10	2
	1a				19-24									41				
24	1	35	60	—	9-24	78	30	18	14	2	56	—	27	40	24	M5	10	2
	1a				22-28									56				
28	1	95	160	—	10-28	90	35	20	15	2,5	66	—	30	48	28	M8	15	10
	1a				28-38									66				

ROTEX® Cast iron (GJL)																		
	1				12-40	114	45							66	37			
38	1a	190	325	405	38-48			24	18	3	80	—	38	78		M8	15	10
	1b				12-48	164	70								62			
	1				14-45	126	50							75	40			
42	1a	265	450	560	42-55			26	20	3	95	—	46	94		M8	20	10
	1b				14-55	176	75								65			
	1				15-52	140	56							85	45			
48	1a	310	525	655	48-62			28	21	3,5	105	—	51	104		M8	20	10
	1b				15-62	188	80								69			
55	1	410	685	825	20-60	160	65	30	22	4	120	—	60	98	52	M10	20	17
	1a				55-74									118				
65	1	625	940	1175	22-70	185	75	35	26	4,5	135	—	68	115	61	M10	20	17
75	1	1280	1920	2400	30-80	210	85	40	30	5	160	—	80	135	69	M10	25	17
90	1	2400	3600	4500	40-97	245	100	45	34	5,5	200	218	100	160	81	M12	30	40

ROTEX® Nodular iron (GJS)																		
100	1	3300	4950	6185	50-115	270	110	50	38	6	225	246	113	180	89	M12	30	40
110	1	4800	7200	9000	60-125	295	120	55	42	6,5	255	276	127	200	96	M16	35	80
125	1	6650	10000	12500	60-145	340	140	60	46	7	290	315	147	230	112	M16	40	80
140	1	8550	12800	16000	60-160	375	155	65	50	7,5	320	345	165	255	124	M20	45	140
160	1	12800	19200	24000	80-185	425	175	75	57	9	370	400	190	290	140	M20	50	140
180	1	18650	28000	35000	85-200	475	195	85	64	10,5	420	450	220	325	156	M20	50	140

■ = If no material is mentioned in the order, it is stipulated in the calculation/order.
[1] Maximum torque of the coupling TKmax. = rated torque of the coupling TK Nenn. x 2. see page 20/21 for selection.
[2] Material Al-H.

Ordering example:

ROTEX® 38	GJL	92 Sh-A	1a	Ø 45	1	Ø 25
Coupling size	Material	Spider hardness	Component	Finish bore	Component	Finish bore